Mathematical Model and MATLAB Analysis of double redundancy permanent Magnet synchronous Generator

Zhao Li

Chongqing Vocational College of Transportation, Chongqing, China

zhaolicq@126.com

Keywords: Double redundancy permanent Magnet. Synchronous Generator. Mathematical Model. Reliability. MATLAB

Abstract: As an important generator of the aircraft, the double-margin permanent magnet synchronous generator improves the reliability of each system. As a key part of electric energy to mechanical energy conversion in the system, the double-margin permanent magnet synchronous generator directly affects the performance of the system. In this paper, the basic structure of the generator analyzed, and the double-redundant permanent magnet synchronous generator establishes the mathematical model of the generator. The coupling relationship between the two windings is studied, and the simulation model of the generator established by using the MTLAB. The results compared with the test results of the prototype, and the output results are consistent.

1. Introduction

With the rapid development of aerospace industry and precision guidance technology in our country, the performance of permanent magnet synchronous motor (PMSM) is getting higher and higher [1]. Permanent magnet synchronous motor (PMSM) occupies an important position because of its high power density, high efficiency, and good control performance and so on. In recent years, with the successful launch of Zhengzhou series spacecraft and Tangoing series space laboratory, the requirement for reliability and stability of motor is becoming stronger and stronger [2], redundant permanent magnet synchronous motor emerges as the times require.

The reliability of generator for aerospace equipment is high. Winding insulation and bearing are the weak links of generator. For bearing less high-speed permanent magnet synchronous generator, improving the reliability of its winding can significantly improve its reliability. Using redundancy technology to back up generator windings is an important means to improve the reliability of generators. China started late, but it has also made great breakthroughs in theoretical research and engineering practice. In this paper, a new type of direct drive multiphase permanent magnet synchronous generator for fan proposed, which improves the structure of multiphase permanent magnet synchronous generator. Aiming at the phase shift 30 °double Y six-phase synchronous wind turbine, the model of the generator in natural coordinate system and double coordinate system is established.

2. Basic structure of double redundancy permanent Magnet synchronous Generator

Permanent magnet synchronous motor (PMSM) has been widely used in aerospace equipment, precision guidance devices and other precision instruments because of its high power density, small volume and good control performance. With the further improvement of reliability and safety, the traditional permanent magnet motor cannot meet this requirement, and the redundancy motor emerges, as the times require. Although redundant motor has good fault-tolerant performance, there are still many problems, such as fault-tolerant control is more complex, fault efficiency is low, there are two driving modes of permanent magnet synchronous motor (PMSM), and one is square wave drive mode. One is sine wave drive. Compared with the former, the rotor position detection of the former is more than that of the rotor position device. Simple, so the system is easier to implement,

  DOI: 10.25236/isaicn.2019.032

but the latter has small torque pulsation and small loss caused by harmonic current, each of which has its own advantages and disadvantages. However, no matter which way to drive, it is necessary to determine the position of the rotor, so to design a special position sensor, the general solution is to place a rotating transformer at the end of the motor. In this way, the dynamic performance of the motor can effectively control, the pulsating loss can effectively reduce and the damage of pulse vibration to the motor can reduced. Make the motor work in a sTable and efficient state.

As we all know, the structure of the motor is very complex, and the materials of each component are also different, and the rotation of the rotor makes the air gap flow between the stator and rotor, as well as the change of gas form and velocity caused by the air gap flow. This makes the study of the temperature field of the motor become a complex problem related to heat transfer, material science, aerodynamics, fluid mechanics and so on. Although the major motor manufacturers, universities and scientific research institutes in China have made fruitful achievements and accumulated rich experience in the comprehensive research of the above disciplines, they have been engaged in special motors such as submersible motor, deep-water detection motor and so on. There is still little research on the heating problem of permanent magnet synchronous motor (PMSM). Therefore, the simulation calculation of double redundancy permanent magnet synchronous motor (PMSM) is of great significance and application value for the optimal design of PMSM and the sTable, efficient and long-term reliable operation of PMSM.

The basic structure of double redundancy permanent magnet synchronous generator is the same as that of ordinary permanent magnet motor, the difference lies in the arrangement of windings. There is only one set of windings in ordinary permanent magnet motor. Two sets of mutually backed windings embedded in the stator slot of the double redundancy permanent magnet synchronous generator (PMSM). With regard to the different arrangement modes and different characteristics of two sets of windings, according to the particularity of the working environment of permanent magnet synchronous generator for aviation, this paper puts forward a kind of winding arrangement with empty slot isolation, in which the two sets of windings are physically isolated. Reduce the magnetic and thermal coupling between each other, so that the motor can still work properly when a set of windings fail. The main package of generator structure studied in this paper including rotor and stator two parts. The rotor includes shaft, magnetic steel and sheath, which used to protect the magnetic steel from being or broken by large centrifugal force at high speed. The stator is composed of stator core and windings. The windings divided into the first winding J1 on the upper side and the second winding on the lower side. The centralized winding arrangement adopted. The two windings symmetrically distributed, with a difference of 360 °electric angle. Under normal working conditions, two sets of windings supply power to different loads independently. When one of the windings fails, the secondary load removed to ensure the power supply of important electrical equipment.

3. Mathematical Model of double redundancy Generator

In order to establish the mathematical model of double redundancy permanent magnet synchronous generator (PMSM), it assumed that the magnetic circuit of the motor is linear. In addition, the saturation and leakage inductance of the iron core not taken into account, the vortex current and hysteretic loss ignored, and the sinusoidal distribution of the magnetic field along the air gap is considered. Take the generator convention as the reference direction of the current. The basic equations of voltage and flux linkage are as follows:

$$u_{7a} = \frac{d\psi_{7a}}{dt} - R_{7a} i_{7a}$$

$$\psi_{7a} = L_{7a} i_{7a} + \lambda_{7a} \psi_f$$

$u_{7a}, i_{7a}, \psi_{7a}, R_{7a}$ is the voltage, current, flux, resistance data matrix in the natural coordinate system, Is the amplitude of the flux chain produced by the permanent magnet:

$$u_{7a} = \left[u_A u_B u_C u_D u_E u_F\right]^T$$

$$i_{7a} = \left[i_A i_B i_C i_D i_E i_F \right]^T$$

$$\psi_{7a} = \left[\psi_A \psi_B \psi_C \psi_D \psi_E \psi_F \right]^T$$

$$R_{7a} = diag\left[RRRRRR \right]$$

In the natural coordinate system, the coupling relationship between windings is complex, and the mathematical model is complex. The mathematical model of motor can simplify by decoupling two sets of windings with appropriate coordinate transformation. In this paper, the double d / Q modeling method is used to decoupling, and two three-phase windings are used as a basic unit, and then the modeling method of three-phase windings is used to model.

4. Simulation modeling

In this paper, MATLAB mainly used to simulate the motor. MATLAB is an advanced technical computing language and interactive environment for algorithm development, data visualization, data analysis and numerical calculation, which produced by MathWorks Company in the United States. MATLAB is a combination of matrix laboratory, which means matrix factory (matrix laboratory). It integrates many powerful functions, such as numerical analysis, matrix computation, scientific data visualization, modeling and simulation of nonlinear dynamic systems, into an easy-to-use window environment for scientific research. Engineering design and many scientific fields where effective numerical calculation must be carried out provide a comprehensive solution and largely get rid of the editing mode of traditional non-interactive programming languages (such as C, Fortran). It represents the advanced level of international scientific computing software.

MATLAB and Mathematical, Maple called the three major mathematical software. MATLAB can carry out matrix operation, draw functions and data, realize algorithm, create user interface, and connect with other programming languages, and so on. MATLAB can be mainly used in engineering calculation, etc., MATLAB can carry out matrix operation, draw functions and data, realize algorithm, create user interface, connect with other programming languages, and so on. Control design, signal processing and communication, image processing, signal detection, financial modeling design and analysis.

The basic data unit of MATLAB is matrix, and its instruction expression is very similar to that commonly used in mathematics and engineering, so it is much simpler to solve the problem with MATLAB than to do the same thing in C, FORTRAN and other languages. In addition, MATLAB absorbs the advantages of software such as Maple, making MATLAB powerful mathematical software. Support for C, FORTRAN, C, JAVA is also added to the new version. MATLAB is very flexible and can divide into several elements with arbitrary shape and arbitrary size. Small grid, according to the needs of different parts of the selection of different dense degree, geometric shape, and boundary conditions complex problems can also be flexible to solve, overall, the universality is very strong.

In MATLAB, including three-phase permanent magnet motor and five-phase permanent magnet motor, the simulation analysis of double redundancy motor can not be carried out by using the motor module of the system, so it needs to be modified on the basis of the original motor model. Based on the construction of each calculation module, the mechanical calculation module adopts the MAT-LAB/Simulink permanent magnet motor system with its own module, and selects the constant angular speed input mode. There are two sets of windings in the double redundancy generator, and there is a coupling relationship between the windings. The two permanent magnet motors connected to form the double redundancy permanent magnet synchronous generator. The overall calculation module shown in figure 1.

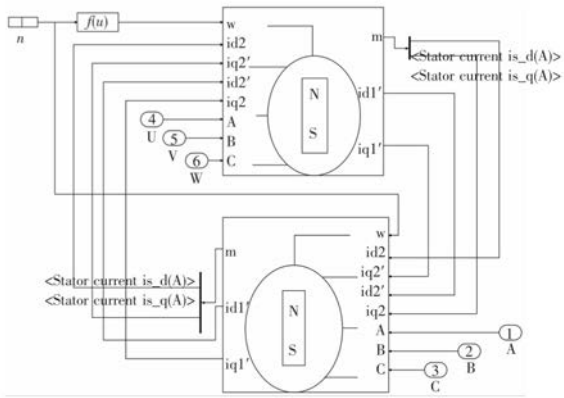

Figure 1. Integral calculation block of double redundancy generator

The generator power equipment studied in this paper needs direct current, and the output AC electricity of the generator needs to change into direct current through the rectifier system. Therefore, the traditional three-phase uncontrollable rectifier circuit is use for rectification. For the double redundancy generator, two sets of independent rectifier circuits needed.

5. Conclusion

In this paper, the basic structure of the stator of the double redundancy permanent magnet synchronous generator for aviation briefly introduced, and its mathematical model established by using the double d / Q coordinate transformation method, and then the establishment method of each module introduced by using MATLAB/Simulink simulation software. The motor simulation model built. Finally, the simulation results compared with the ANSYSMaxwell simulation results and the prototype test results. The simulation model established in this paper can used in the analysis and calculation of double redundancy permanent magnet synchronous generator and the research of control system, and can be applied to the research of n-3 phase motor. The application of Cheng has certain significance.

Looking forward to the future research work, there are the following two main aspects:

The main contents are as follows: (1) the control circuit and control algorithm of double redundancy permanent magnet synchronous motor (PMSM) are studied. The simulation and experiment are carried out for various working conditions, such as one set of windings running alone, two sets of windings running together, one set of windings failing and the other working separately. In redundancy technology, switching control between channels is also a very important link. and the corresponding control algorithm should be established.(2) the prototype is developed, the performance of the prototype is tested comprehensively, the design method and control algorithm of the motor are verified, the shortcomings of understanding, design and technology are corrected according to the test results, and the optimization design method and control algorithm are improved. It lays a solid foundation for practical engineering application. Motor is widely used in advanced aircraft, and double redundancy permanent magnet synchronous motor (PMSM) is one of the important research directions. However, the traditional double redundancy permanent magnet synchronous motor (PMSM) often has electromagnetic coupling and thermal coupling between the channels, which affects the reliability of redundancy technology. In order to improve the reliability, it is necessary to design a scheme to solve the problem of electrical, magnetic and thermal coupling between windings. .

References

[1] Army, Zhang Yuan g, Wang C l. Summary of redundancy Technology of Electric Actuator [J]. Mechanical transmission, 2010, 34 (3): 92 ≤ 95.

[2] G Jinxing, Dai Z y, Q X y, etc. Design and Research of double redundancy Brushless DC Motor

for Actuator [J]. Micro special motor, 2011, 39 (12): 13 ≤ 15, 25.

[3] Wang H j. Design of double redundancy electric servo steering gear system [D]. Nanjing: Nanjing University of Aeronautics and Astronautics, 2010.

[4] Liu W g, Ma R q. Double redundancy brushless DC motor control system [J]. Electrical Technology, 2006, (7): 11 / 13.

[5] Wu Z y, G Hong, Lu Z h . Optimal design of double redundancy brushless DC motor based on genetic algorithm [J]. Journal of Beijing University of Aeronautics and Astronautics, 201137 (12): 1541 1545, 1568.

[6] Wang Wei, G Hong, Li Y m, et al. Study on rotor Pole Arc coefficient of Electric double redundancy Brushless DC Motor [J]. Journal of Motor and Control, 2009, 13 (6): 862 ≤ 866.

[7] Wang Wei, G Hong, Xing Wei, et al. Electric / mechanical hybrid four-redundancy brushless DC torque motor control system [J]. Proceedings of the Chinese Journal of Electrical Engineering, 2010, 30 (6): 100 ≤ 104.

[8] Ma L l. Xing Wei, G Hong, et al. ADRC control of redundant brushless DC motor [J]. Journal of Beijing University of Aeronautics and Astronautics, 2010, 36 (5): 617 / 622.

[9] Zhou Y j. Mathematical model and torque characteristics of double winding brushless DC motor [J]. Journal of Electrotechnics, 2004, 19 (4): 12 / 16.

[10] Zhou Y j, Dong H f, Wang Z q. Fault-tolerant operation mode of brushless DC motor for flight control [J]. Journal of Beijing University of Aeronautics and Astronautics, 2006, 32 (2): 190.

[11] Kral C, Habetler T G, Harley R G. Rotor temperature estimation of squirrel cage induction motors by means of a combined scheme of parameter estimation and a thermal equivalent mode [C]//IEEE International Electric Machines and Drives Conference. Madison, Wisconsin, USA, 2003: 93 1-937.

[12] Guo Y, Zhu J G, Wu W. Thermal analysis of soft magnetic composite motors using a hybrid model with distributed heat sources [J]. IEEE Transactions nonmagnetic, 2005, 41(6): 2124-2128.

[13] Jack A G, Me crow B C, Hay lock J A. A comparative study of permanent magnet and switched reluctance motors for high-performance fault-tolerant applications [J]. IEEE Transaction on Industry Applications, 1996, 32(4):889-895.

[14] Me crow B C, Jack A G. Design and testing of a four phase fault-tolerant permanent machine for an engine fuel pump[J]. IEEE Transactions on Energy Conversion, 2004, 19(2): 132-137.

[15] Haylock J A, Me crow B C, Jack A G, et al. Operation of a fault tolerant PMdrive for an aerospace fuel pump application[J]. IEEE Proceedings of Electric Power Applications, 1998, 145(5): 441-448.

[16] Kolondzovski Z. Determination of critical thermal operations for high-speed permanent magnet electrical machines [J]. COMPEL-The International Journal for Computation and Mathematics in Electrical and Electronic Engineering. 2008, 27(4):720-727.